WOODEN AND FIBERGLASS HAMMERS

CERTIFIED PREMIUM HAND TOOLS

EGA Master has renewed its range of **wooden and fiberglass handles** to satisfy the demand from the most professional user. **The handle-head fixation is reinforced in both handle types,** completely avoiding the disattachment of the head from the handle. Their manufacturing materials guarantee a durable use. For these reasons, EGA Master handles are a quality guarantee for industrial uses.

1. **High resistance special steel.**

2. **50-58HRC** in impact area (ISO 15601).

3. Grey hammer tone finishing.

4. **Safety pin or conical go-through handle for** perfect fixation handle-head.

5. **Reinforced piece** to avoid the breakage of the handle in its critical zone.

6. **High quality wooden handle.**

7. **Conical wedge** to improve the pressure distrution.

8. **Ultra-resistant fiberglass.**

9. **Handle outer zone in PP and TPR: strength and adherence.**

DEAD BLOW HAMMER

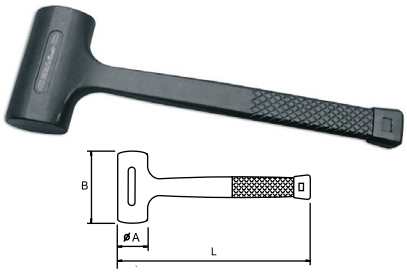

COD	L	øA	B			
69748	275	40	80	0,5 Lb	6	1
69750	325	50	110	1,5 Lb		
69751	340	55	120	2 Lb		
69752	360	60	130	3 Lb		
69753	425	65	140	4 Lb	3	-
69754	430	70	150	5 Lb		
69755	430	75	165	6 Lb		

The head is filled with **Steel micro-beads which effectively absorb the impact and eliminate hammer rebound.**

The housing, which is made of a **mix of special rubber & PVC,** enables the hammer to **absorb impacts more effectively whilst still providing the necessary rigidity and resistance, but it also allows the hammering of metal parts without the risk of damage and breakage.**

GERMAN TYPE STONING HAMMER

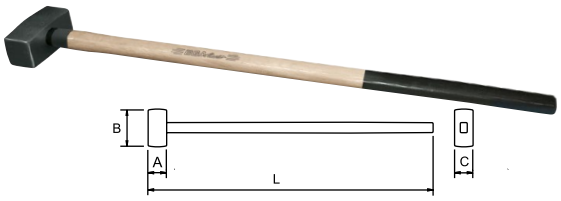

COD	Kg.		L	A	B	C	
69640	3	COD.81692	900	56	135	56	1
69641	4			61	145	64	
69642	5			68	151	68	
69643	6			70	165	70	
69648	8			83	180	83	
69655	10			86	200	86	

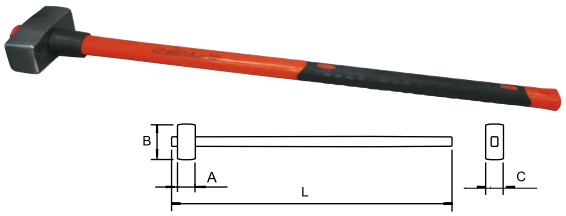

COD	Kg.		L	A	B	C	
69644	3	*CONIC.81737 *RESIN.85981	900	56	135	56	1
69645	4			61	145	64	
69646	5			68	151	68	
69647	6			70	165	70	
69649	8			83	180	83	
69677	10			86	200	86	

FIBERGLASS

SLEDGE HAMMER

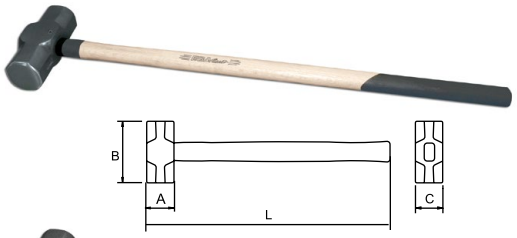

COD			L	A	B	C	
69650	4Lb	COD.81693	400	51	136	48	1
69651	6Lb	COD.81694	900	54	146	51	
69652	8Lb			58	161	59	
69653	10Lb			64	173	62	
69654	12Lb			66	180	66	

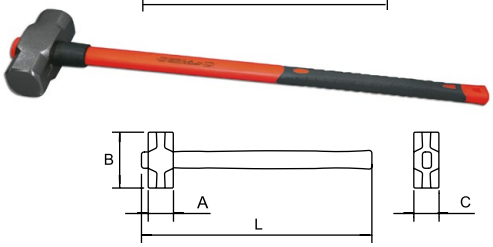

COD			L	A	B	C	
68530	4Lb	CONIC.81225	400	51	136	48	1
68531	6Lb	CONIC.81226	900	54	146	51	
68532	8Lb			58	161	59	
68533	10Lb			64	173	62	
68534	12Lb			66	180	66	

FIBERGLASS

For general hammering operations and especially for demolition work.

SPANISH TYPE STONING HAMMER

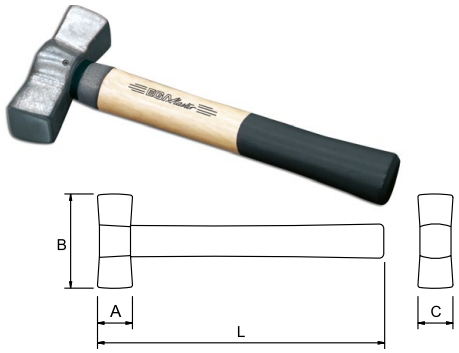

COD	Kg.		L	A	B	C	
69659	0,7	COD.81695	260	33	105	33	6
69660	1	COD.81696	280	37	129	37	
69661	1,4			41	138	43	

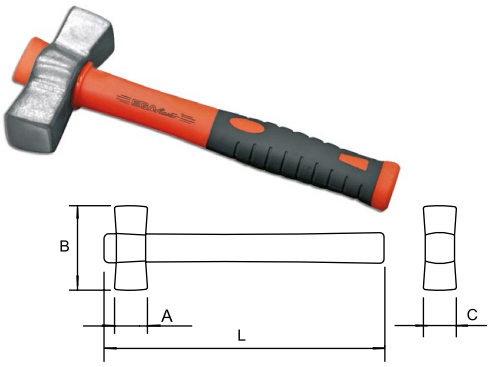

COD	Kg.		L	A	B	C	
69662	0,7	*CONIC.81118 *RESIN.81738	255	33	105	33	6
69663	1	*CONIC.81119 *RESIN.81739	280	37	129	37	
69664	1,4			41	138	43	

FIBERGLASS

GERMAN TYPE STONING HAMMER

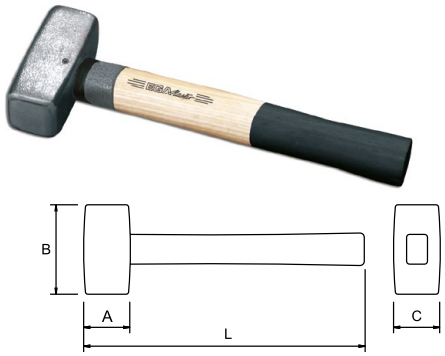

COD	Kg.		L	A	B	C	
69665	0,8	COD.81697	260	41	95	40	4
69605	1						
69606	1,25	COD.81698		42	99	43	2
69607	1,5	COD.81699	280				

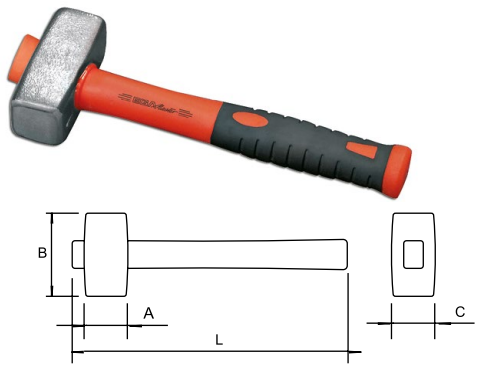

COD	Kg.		L	A	B	C	
69666	0,8	*CONIC.81118 *RESIN.81740	260	41	95	40	4
69667	1						
69668	1,25			42	99	43	2
69669	1,5	*CONIC.81119 *RESIN.81741	290				

FIBERGLASS

Designed for general hammering operations and for use with chisels and cold chisels.

BRITISH TYPE STONING HAMMER

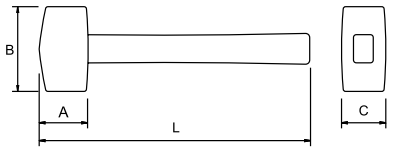

COD			L	A	B	C		
69671	2,5 Lb	COD.81700	280	45	92	45		1
69672	3 Lb			46	104			

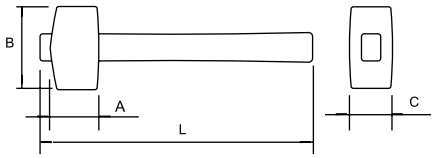

COD			L	A	B	C		
69673	2,5 Lb	*CONIC.81119	280	45	92	45		1
69674	3 Lb	*RESIN.81742		46	104			

FIBERGLASS

Designed for general hammering operations and for use with chisels and cold chisels.

GERMAN TYPE MACHINIST'S HAMMER

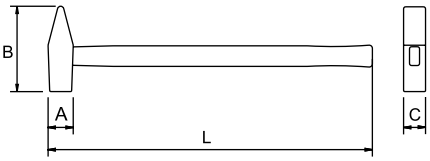

COD	gr.		L	A	B	C		
69618	200	COD.81701	275	20	96	21	6	1
69619	300	COD.81702	305	23	103	23		
69620	400			27	118	28		
69621	500	COD.81703	325					
69622	600			29	123	31		
69675	800	COD.81704	340	33	128	32		
69676	1000	COD.81705	355	37	135	37		

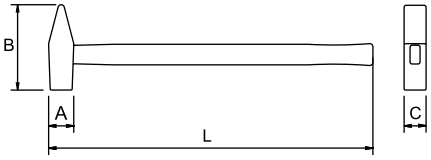

COD	gr.		L	A	B	C		
69731	200	COD.81743	255	20	96	21	6	1
69732	300	COD.81744	275	23	103	23		
69733	400			27	118	28		
69734	500	COD.81745	300					
69735	600			29	123	31		
69736	800	COD.81746	350	33	128	32		
69737	1000			37	135	37		

FIBERGLASS

JOINER'S HAMMER

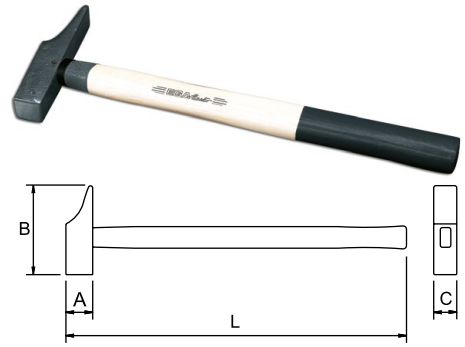

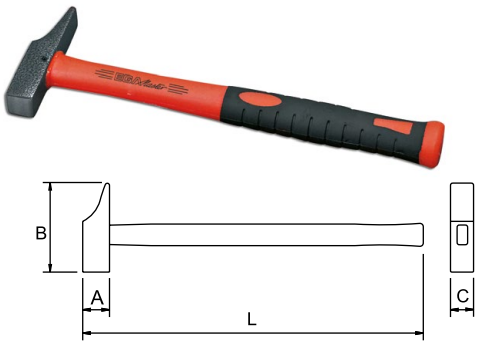

COD	mm		L	A	B	C	gr.		
69601	18	COD.81708	270	17	88	17	150	6	1
69602	20			20	93	19	200		
69603	22			22	97	23	250		
69604	25	COD.81709	300	25	107	24	350		
69681	28			28	116	27	450		
69682	30	COD.81710	310	30	121	29	550		

COD	mm		L	A	B	C	gr.		
69684	18	COD.81747	250	17	88	17	150	6	1
69685	20			20	93	19	200		
69686	22	COD.81748	278	22	97	23	250		
69687	25			25	107	24	350		
69688	28			28	116	27	450		
69689	30			30	121	29	550		

FIBERGLASS

The carpenters hammer head is formed with one squared end and one narrow end for use with small nails and pins, **to reduce the risk of contact with fingers and causing damage to the work piece.**

FRENCH TYPE MACHINIST'S HAMMER

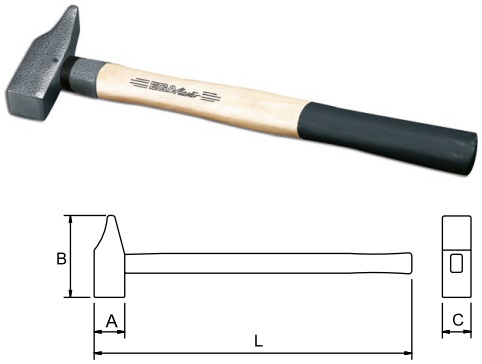

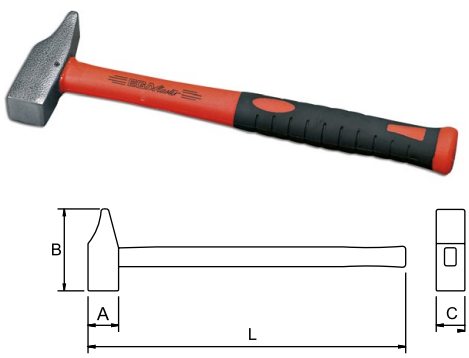

COD	mm		L	A	B	C	gr.		
69691	25	COD.81711	280	22	96	25	250	6	1
69692	30	COD.81712	300	29		30	375		
69693	35	COD.81713	350	38	102	35	675		
69694	40			40	116	40	900		
69695	45			44	124	45	1100		

COD	mm		L	A	B	C	gr.		
69738	25	COD.81749	270	22	96	25	250	6	1
69739	30	COD.81750	300	29		30	375		
69740	35			38	102	35	675		
69741	40	COD.81751	350	40	116	40	900		
69756	45			44	124	45	1100		

FIBERGLASS

BALL PEIN HAMMER

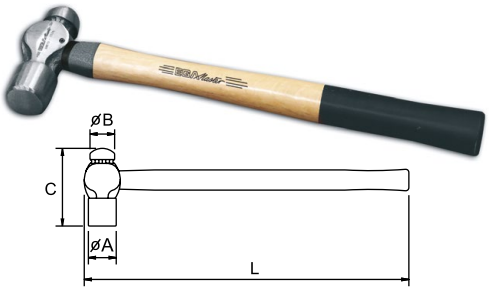

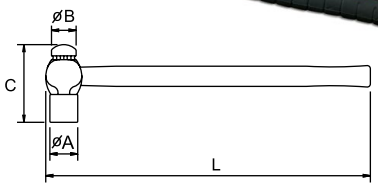

COD	MOD.		L	øA	øB	C	gr.		
69612	A	COD.81714	280	23	22	80	250		
69613	B	COD.81715	300	30	27	94	350		
69614	C	COD.81716	320		28	104	500	1	1
69616	E	COD.81717	340	32	30	118	700		
69617	F	COD.81718	370	39	32	127	1000		

COD	MOD.		L	øA	øB	C	gr.		
69704	A	COD.81752	270	23	22	80	250		
69705	B	COD.81753	300	30	27	94	350		
69706	C				28	104	500	1	1
69758	D			32	30	118	600		
69707	E	COD.81754	340				700		
69708	F			39	32	127	1000		

FIBERGLASS

For the hammering of metal and steel, rivets, welds etc.

SPANISH TYPE CLAW HAMMER

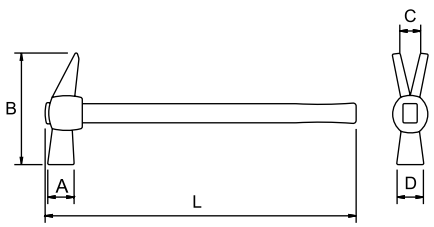

COD	gr.		L	A	B	C	D		
69711	300	COD.81719	380	23	129	8	26		
69712	400	COD.81720	400	29	141	12	29	6	1
69713	500				142				

COD	gr.		L	A	B	C	D		
69715	300			23	129	8	26		
69716	400	COD.81755	385	29	141	12	29	6	1
69717	500				142				

FIBERGLASS

The spanish type claw hammer is characterised by having a head with a **large striking area combined with a lever-shape to facilitate the removal of nails and general dismantling.**

The sharp claws enable **easier assembly and dismantling of jobs.**

CLAW HAMMER

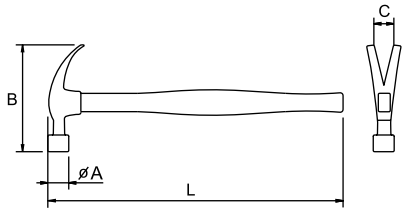

COD	gr.	L	øA	B	C		
69742	550	COD.81723	320	30	138	7	6	1

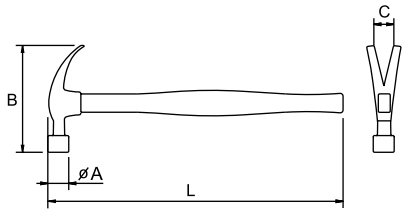

COD	gr.	L	øA	B	C		
69719	550	COD.81756	330	30	138	7	6	1

FIBERGLASS

Principally used for hammering, nailing or the removal of nails and other objects. Generally this hammer is associated with woodworking, but it can also be used with iron, aluminium and other diverse materials.

AMERICAN CLAW HAMMER

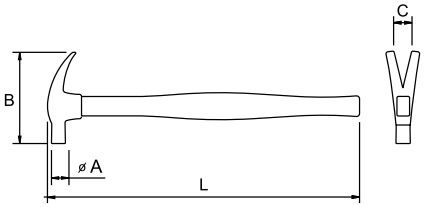

COD	mm	L	øA	B	C	gr.		
69679	21	COD.81724	280	23	102		250		
69608	23	COD.81725	300		111	6	350		
69609	25			25	128		450	6	1
69610	27	COD.81726	320	27	132	7	525		
69611	29			28	136	9	600		

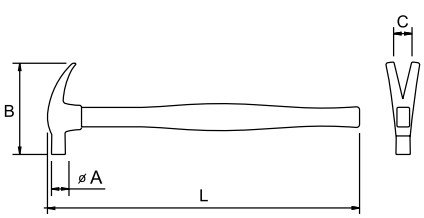

COD	mm	L	øA	B	C	gr.		
69743	21	COD.81757	300	23	102		250		
69744	23				111	6	350		
69745	25	COD.81758	330	25	128		450	6	1
69746	27			27	132	7	525		
69747	29	COD.81759	380	28	136	9	600		

FIBERGLASS

For hammering operations including nailing and for the dismantling of wooden constructions.

SQUARE HEAD CLAW HAMMER

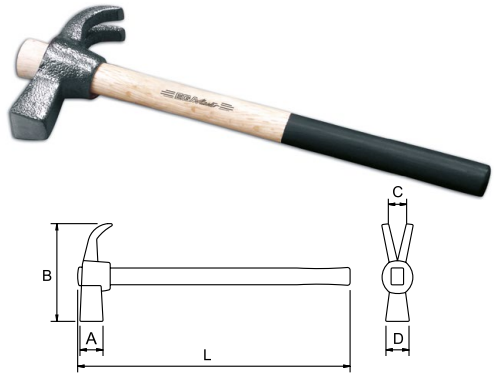

COD	mm		L	A	B	C	D	gr.		
69696	28	COD.81727	310	25	110	9	29	400	6	1

For hammering operations including nailing and for the dismantling of wooden constructions.

CLAW HAMMER

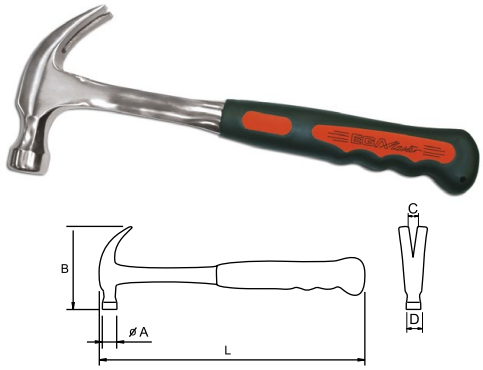

COD	Oz.	L	A	B	C	D		
69680	16	338	29	130	8	29	6	1

FORGED HANDLE

The claw hammer with a forged handle, offers excellent features including a **non-slip ergonomic handle for a better grip and easy handling.**

ENGINEER'S CROSS PEIN HAMMER

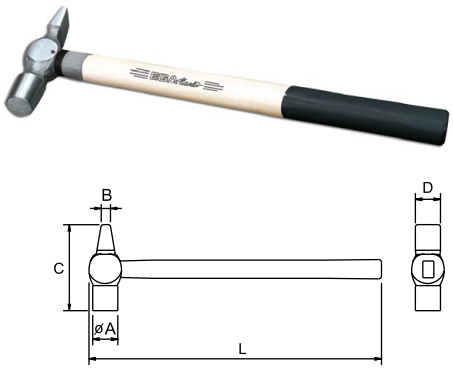

COD	gr.		L	øA	B	C	D		
69700	200	COD.81706	300	20	5	104	22	6	1
69701	250	COD.81707		22	6	117	26		
69702	350		320	25		118			

They are used in the **forging process** and are commonly used by blacksmiths, mechanics, etc.

ELECTRICIAN HAMMER

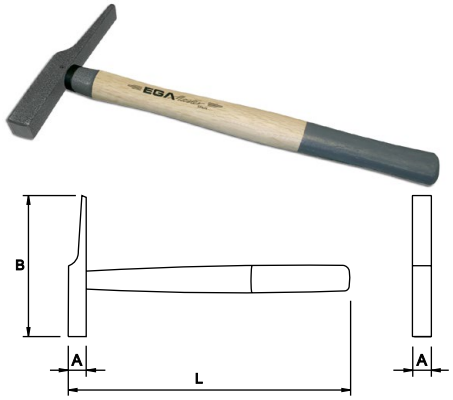

COD	gr.		L	A	B	C		
69600	300	COD.81708	295	18	140	18	6	1

A very light hammer with a large head. **Useful for hammering small nails and pins into mouldings and other decorative strips.**

CHIPPING HAMMER

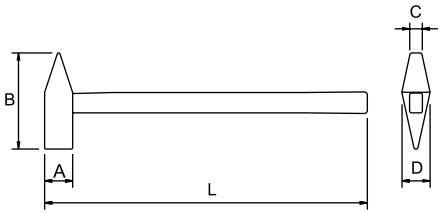

COD	gr.		L	A	B	C	D		
69678	450	COD.81722	320	27	150	27	27	6	1

To clean weld points.

NYLON HAMMER

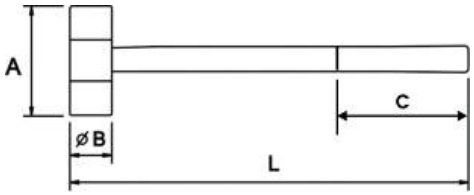

COD	gr.		L	A	øB	C		
55325	235	COD.81728	290	80	26	90	6	1
55326	340		310	86	30			
55327	490	COD.81729	315	95	35	100		

COD	
84210	26
84211	30
84212	35

COD	
85426	26
85427	30
85428	35

They are hammers that are used in order to damage and mark as little as possible the surfaces on which they are hit.

BLACK RUBBER MALLET

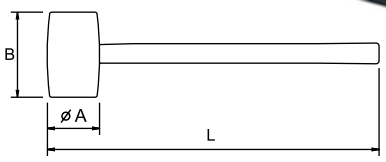

COD	gr.		L	ø A	B		
69520	340	COD.81730	320	60	100	2	1
69521	450		340	65	115		
69726	900	COD.81731	350	80	125		

Special for tiling jobs and for general adjustment uses.

SQUARE COPPER MALLET

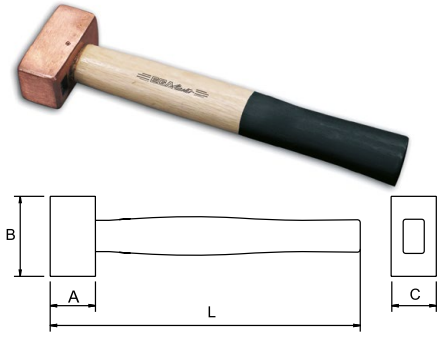

COD	mm	gr.		L	A	B	C		
69728	30	500	COD.81732	240	26	77	29	6	1
69729	35	1000	COD.81733	260	36	88	39	4	
69730	40	1500	COD.81734	280	41	99	43		

For hammering and shaping without causing damage to the actual work piece. Copper is a soft material that conducts heat and electricity well but does not produce sparks. **Ideal for the oil industry, metal mining, coal mining, oil extraction, etc.**

PICKS

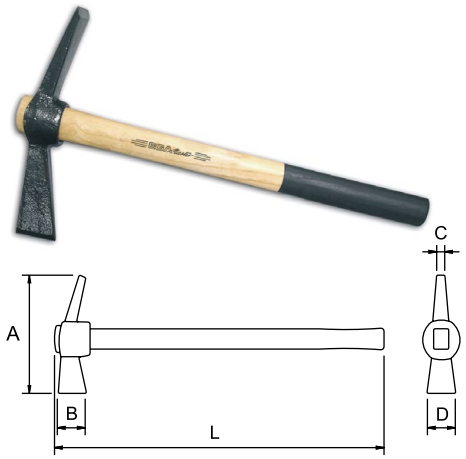

COD	gr.		L	A	B	C	D	
69759	400	COD.81736	380	229	39	5	34	6
69760	500			237	41	6	35	

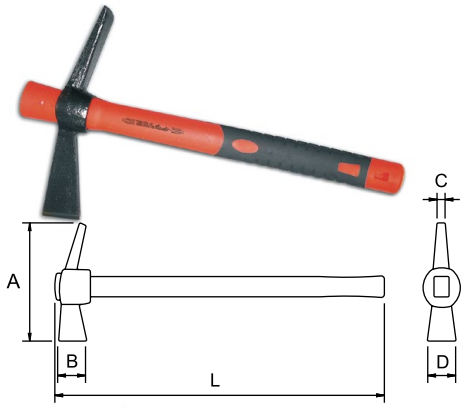

COD	gr.		L	A	B	C	D	
69762	400	COD.81761	385	229	39	5	34	6
69761	500			237	41	6	35	

FIBERGLASS

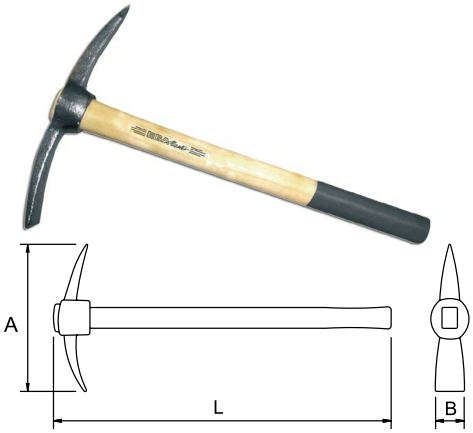

COD	gr.		L	A	B	
69765	500	COD.81736	380	240	38	6

PICKS

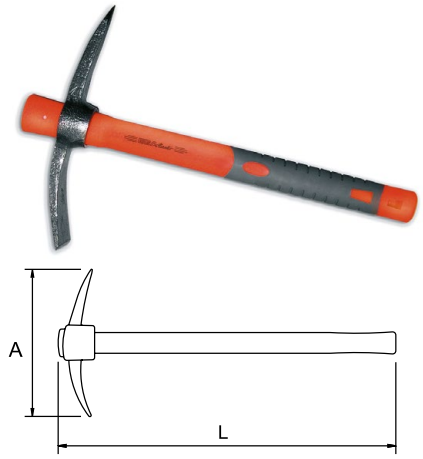

COD	gr.		L	A	B	
69766	400	COD.81761	385	236	36	6
69767	500			240	38	

FIBERGLASS

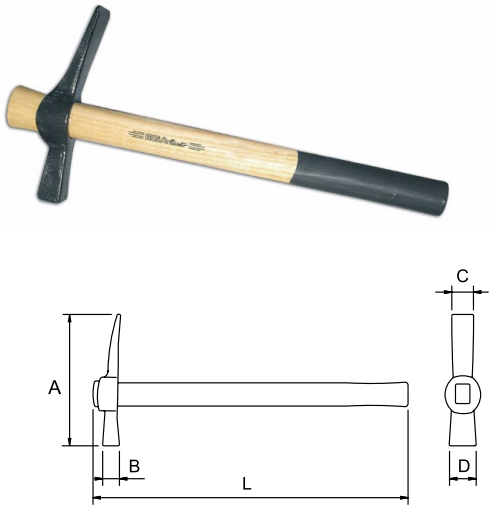

COD	gr.		L	A	B	C	D	
69770	400	COD.81736	380	237	10	10	36	6
69771	500			197	24	35	25	

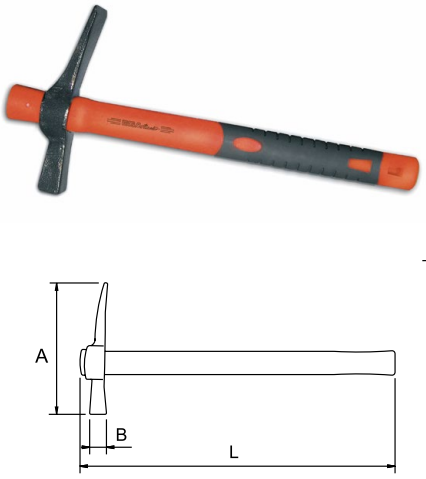

COD	gr.		L	A	B	C	D	
69772	400	COD.81761	385	237	10	10	36	6
69773	500			197	24	35	25	

FIBERGLASS

For hammering operations. Surface breaking and scraping.

"This document has been created by and is the property of EGA Master S.L. Thus, all intellectual rights belong to EGA Master S.L. Any total or partial copy of this document in any physical, electronic or any other form is strictly forbidden. EGA Master S.L. will legally proceed against any infringement of these rights."